LED solutions to low carbon

SPECIFICATION

SMD LED FLUORESCENT

Made by	Checked by	Version
Ms. Katie	Ms. Jane	2009.8.29

SMD LED FLUORESCENT 1.5M Type-A

Features:

A: LED Tubes are rated to last well over 50,000 hours. Standardfluorescent tubes are rated at 20,000 hours or less. LED fluorescentreplacements are perfect for difficult areas to change bulbs or where paid maintenance personnel replace bulbs.

B: LED Tubes consume up to half the power of a standard fluorescent tube.

C: LED Tubes have no flicker, hum or buzz.

D: LED Tubes contain no mercury like standard fluorescent tubes.

F: LED Tubes come on instantly. No annoying warm up.

E: LED Tubes require no ballast. No future ballast maintenance and replacement is a sizable cost and time savings.

G: And through various certification, CE, ROHS, FCC, Certificate.

Photos :

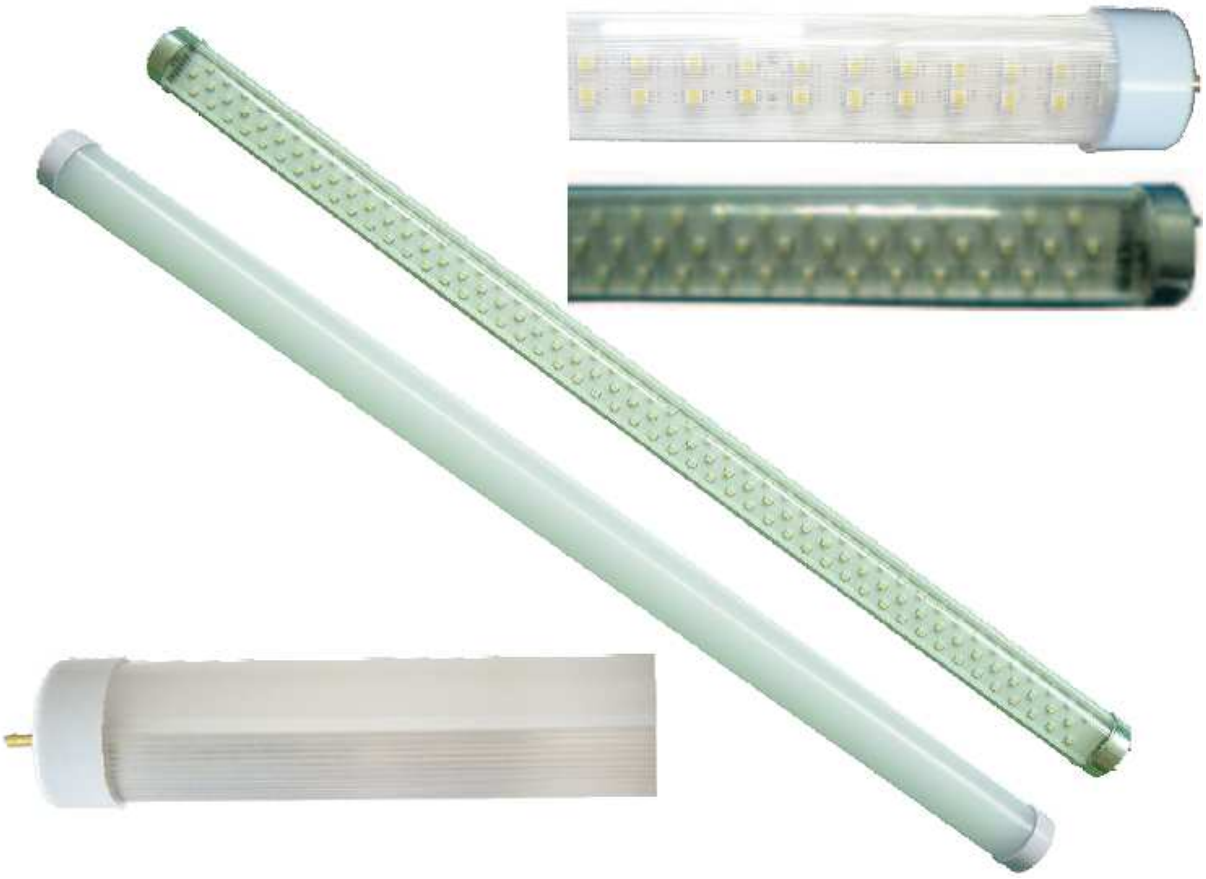

LED Fluorescent

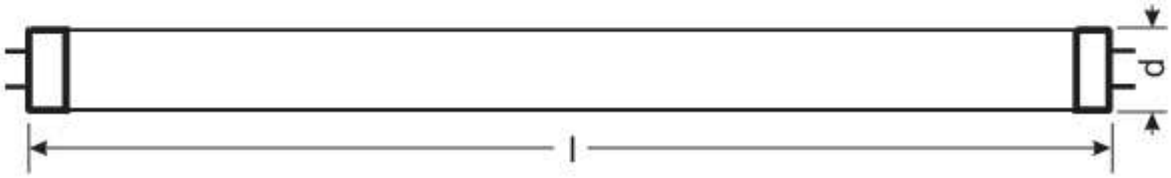

Part Number	Emitting Color	LED QTY	lumens per unit (lumens)	Size	Input Voltage (V AC)	Max. power (watts)	Viewing Angle (degree)	IP rated	Body Material
LD144-T8-W	white	144	936	⌀33*600mm	AC 110-220V	8W	140	IP20	aluminum back + millky diffuser (or aluminum rear+ transparent cover)
LD144-T8-WW	warm white	144	864	⌀33*600mm	AC 110-220V	8W	140	IP20	
LD277-T8-W	white	277	1801	⌀33*1200mm	AC 110-220V	16W	140	IP20	
LD277-T8-WW	warm white	277	1662	⌀33*1200mm	AC 110-220V	16W	140	IP20	
LD400-T8-W	white	348	2262	⌀33*1500mm	AC 110-220V	20W	140	IP20	
LD400-T8-WW	warm white	348	2088	⌀33*1500mm	AC 110-220V	20W	140	IP20	

Note: TLAis transparent light window ; TLAS is Stripe light window;

TLAD is diffused light window;

LED Fluorescent

Absolute Maximum rating atTa=25 degree			
Parameter	Symbol	Rating	Uint
Operating temperature range	Topr	-20 to +50	° C
Storage temperature range	Tstg	-30 to +80	° C

Dimension

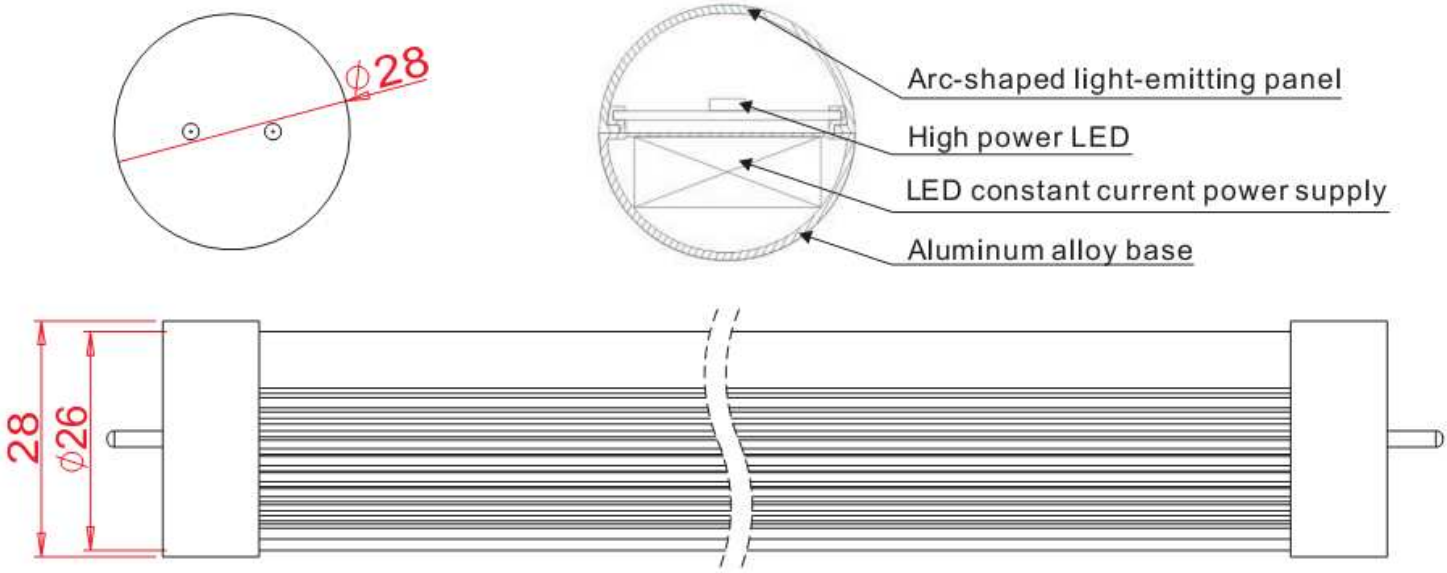

1. All dimensions are in millimeters.
2. Tolerance is±2mm unless otherwise noted.

How to use

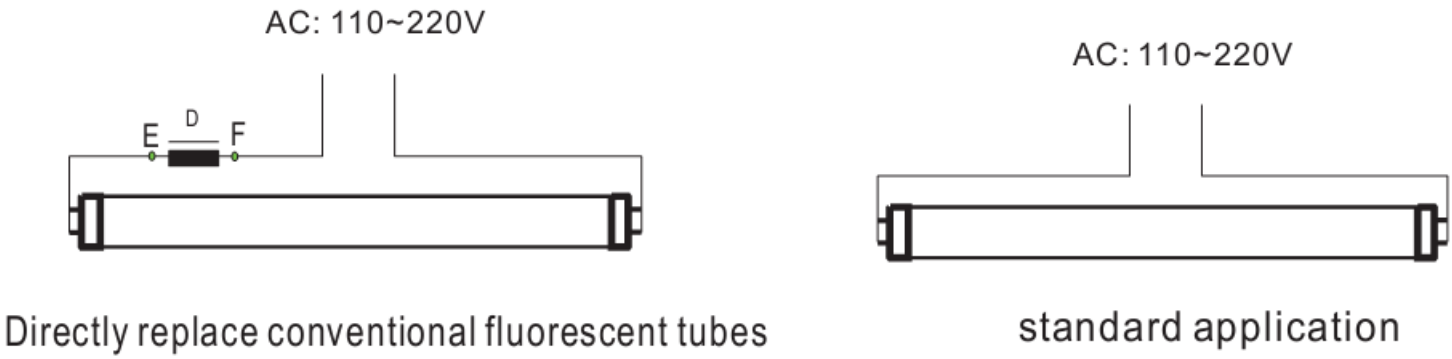

1: Ballast (as indicated as “D”), if
1.1 the ballast is digital type, it must be removed away and short the cable there and reconnect pt E and pt F.
1.2 the ballast is conventional type, it can be kept there without any modification but have to screw off the starter before on.
2: It is recommended to have the installation by qualified electrician.